KONDRAIN®
Condensate Drains

Rev 01_1026

Fully automatic condensate removal from compressed air systems



Premium cost efficient solution

The production of compressed air is as necessary as it is cost intensive. **KONDRAIN®** condensate drains are cost effective and offer the following benefits:

- The intelligent level regulation ensures no unnecessary air loss and therefore no energy loss.
- The clever level-controlled versions remove condensate once accumulated in the drains reservoir.

As a result KSI **KONDRAIN®** condensate drains contribute globally to significantly increasing the efficiency of production sites.

The KONDRAIN® Plus-Effects +++

+ no unnecessary compressed air loss saves operating costs
+ proven technology, suitable for every condensate type
+ maximizes operational reliability by protecting installations, processes and products
+ assures demand-appropriate compressed air quality
+ robust quality, long service life
+ intelligent control, fully automatic monitoring
+ immune to dirt because of integrated sieve filter
+ very service-friendly
+ excellent price/performance ratio

Premium reliability

The **KONDRAIN®** series offer the highest level regulated, fully automated draining reliability. This helps to avoid condensate breaches and contamination in the compressed air system. At the same time **KONDRAIN®** reliably protects compressed air-driven installations, control systems, production processes and, ultimately, product quality. The **KONDRAIN®** series features an extreme performance spectrum and is therefore capable of reliably discharging condensate ranging in consistency from 100% oil to 100% water. This provides the highest degree of safety for your compressed air system.

Level-regulated electronic condensate drain

KONDRAIN® N is a high-performance condensate drain that measures the condensate level internally and discharges it using level control, resulting completely without compressed air loss, at maximum condensate volume. The level regulation is reliably assured via the industrial reed contact and float technology that has proven itself millions of times all over the world. This means that a contact float unit that is process-conforming specifically for condensate technology triggers the opening of the release valve when the maximum level is reached for the exact duration until the drain minimum level is reached, allowing the valve to close again.

Performance features

- flexible connection, a 90° rotatable connection facilitates-flexible installation
- highly durable Viton membrane
  ▸ more reliability and long service life
- maximum protection for membrane and function through integrated filter
- functional test is possible at any time via a test button, which can also be used for manual emptying
- self monitoring using intelligent control
- operational protection through auto reset function
- status message in the case of alarm (except model N1)
- zero-voltage contact (except model N1)
- voltage display (except model N1)
- consistent performance level for condensate ranging from 100% oil to 100% water
- just one service kit for the entire series
- ecologically & economically oriented solutions

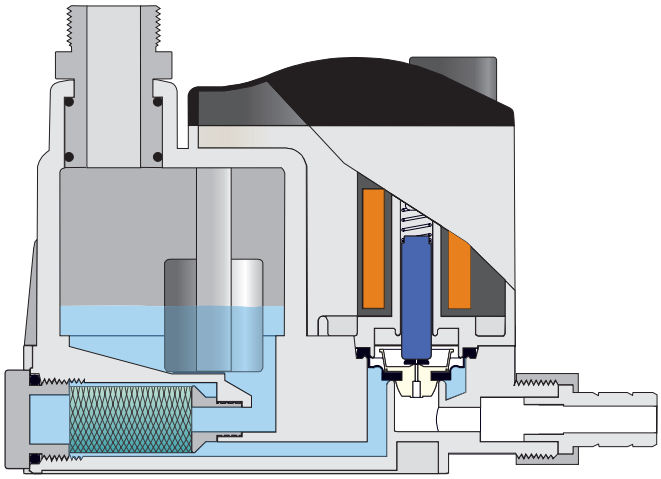

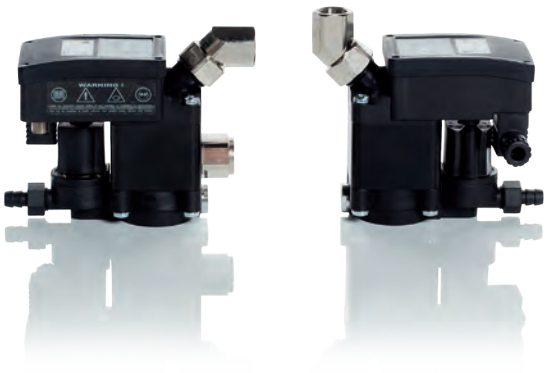

Level-controlled condensate drains



Spezification | Type	N1	N5	N10	N30	N160	N300
Capacity compressor	10 m³/min	7,5 m³/min	15 m³/min	30 m³/min	158 m³/min	300 m³/min
Capacity dryer	20 m³/min	15 m³/min	30 m³/min	60 m³/min	316 m³/min	600 m³/min
Capacity filter	100 m³/min	75 m³/min	150 m³/min	300 m³/min	1580 m³/min	3000 m³/min
Potential-free alarm output	no	yes	yes	yes	yes	yes
Operating pressure	0,2 to 16 bar					
Operating Temperature	1 to 60 °C					
Available types of voltage	230 V 50/60 Hz 115 V 50/60 Hz 24 V ac 24 V dc on request					
Protection rating	IP 65					

Options



heaters



only one single spare part kit for the complete series



floor mounting kit

Further variations

KN5 with condensate inlet in tank

incl. connection for necessary pendant cable



Type	Voltage
KN5LOW.230V	230 V · 50-60 Hz
KN5LOW.115V	115 V · 50-60 Hz
KN5LOW.24VDC	24 V dc
KN5LOW.24VAC	24 V ac

KN5 compact design

for space-critical assemblies



Type	Voltage
KN5SV.230V	230 V · 50-60 Hz
KN5SV.115V	115 V · 50-60 Hz
KN5SV.24VDC	24 V dc
KN5SV.24VAC	24 V ac

Level-controlled condensate drains · High pressure



KONDRAIN® KN100-HP50 (up to 50 bar) - Normally open

level-controlled · drainage without air loss | incl. alarm

Type	Capacity*	Inflow	Voltage
KN100-HP50-230-NO	100 m³/min	1/2 "	230 V · 50-60 Hz
KN100-HP50-115-NO	100 m³/min	1/2 "	115 V · 50-60 Hz
KN100-HP50-24ac-NO	100 m³/min	1/2 "	24 V ac
KN100-HP50-24dc-NO	100 m³/min	1/2 "	24 V dc

* compressor connected load

KONDRAIN® KN100-HP50 (up to 50 bar) - Normally closed

level-controlled · drainage without air loss | incl. alarm

Type	Capacity*	Inflow	Voltage
KN100-HP50-230-NC	100 m³/min	1/2 "	230 V · 50-60 Hz
KN100-HP50-115-NC	100 m³/min	1/2 "	115 V · 50-60 Hz
KN100-HP50-24ac-NC	100 m³/min	1/2 "	24 V ac
KN100-HP50-24dc-NC	100 m³/min	1/2 "	24 V dc

*compressor connected load

Time-controlled condensate drain with adjustable interval times





Features

- simplest operation
- most compact dimension
- interval time can be optimized at any time
- opening interval can be seen at a glance
- manual emptying possible at any time via test switch
- highest functional safety
- available as **KONDRAIN®** KMT-HP for pressures of 50, 250, 350 and 500 bar

Specification | Type	KMT230.12.BSP	KMT115.12.NPT
Inflow / Outflow	1/2" BSP	1/2" NPT
Voltage	230 V 50/60 Hz	115 V 50/60 Hz
Capacity compressor	max 60 m³/min	
Operating pressure	0,2 to 16 bar	
Operating temperature	2 to 55 °C	
Protection rating	IP 65	

Time-controlled Condensate Drain · High Pressure



KONDRAIN® KMT-HP80 (up to 80 bar · stainless steel valve) time-controlled with adjustable intervals

Type	Capacity*	Inflow	Voltage
KMT-HP80-230	unlimited	¼ "	230 V · 50-60 Hz
KMT-HP80-115	unlimited	¼ "	115 V · 50-60 Hz
KMT-HP80-24ac	unlimited	¼ "	24 V ac
KMT-HP80-24dc	unlimited	¼ "	24 V dc

Compressor capacity

KONDRAIN® KMT-HP250 (up to 250 bar · stainless steel valve) time-controlled with adjustable intervals

Type	Capacity*	Inflow	Voltage
KMT-HP250-230	unlimited	¼ "	230 V · 50-60 Hz
KMT-HP250-115	unlimited	¼ "	115 V · 50-60 Hz
KMT-HP250-24ac	unlimited	¼ "	24 V ac
KMT-HP250-24dc	unlimited	¼ "	24 V dc

Compressor capacity

KONDRAIN® KMT-HP350 (up to 350 bar · stainless steel valve) time-controlled with adjustable intervals

Type	Capacity*	Inflow	Voltage
KMT-HP350-230	unlimited	¼ "	230 V · 50-60 Hz
KMT-HP350-115	unlimited	¼ "	115 V · 50-60 Hz
KMT-HP350-24ac	unlimited	¼ "	24 V ac
KMT-HP350-24dc	unlimited	¼ "	24 V dc

Compressor capacity

KONDRAIN® KMT-HP500 (up to 500 bar · stainless steel valve) time-controlled with adjustable intervals

Type	Capacity*	Inflow	Voltage
KMT-HP500-230	unlimited	¼ "	230 V · 50-60 Hz
KMT-HP500-115	unlimited	¼ "	115 V · 50-60 Hz
KMT-HP500-24ac	unlimited	¼ "	24 V ac
KMT-HP500-24dc	unlimited	¼ "	24 V dc

Compressor capacity